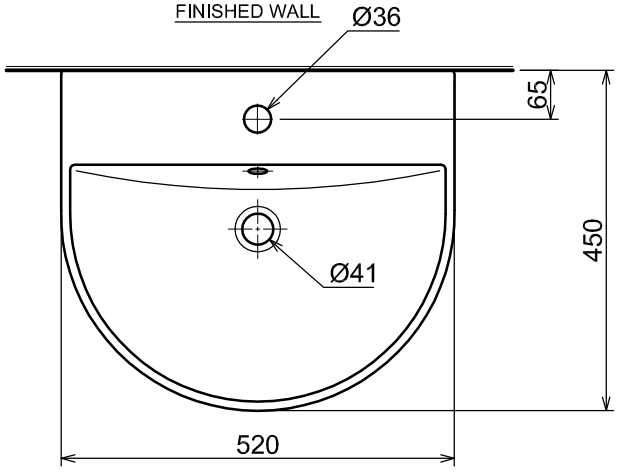

PLAN / TOP ELEVATION

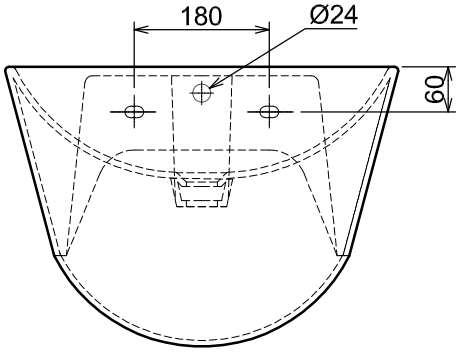

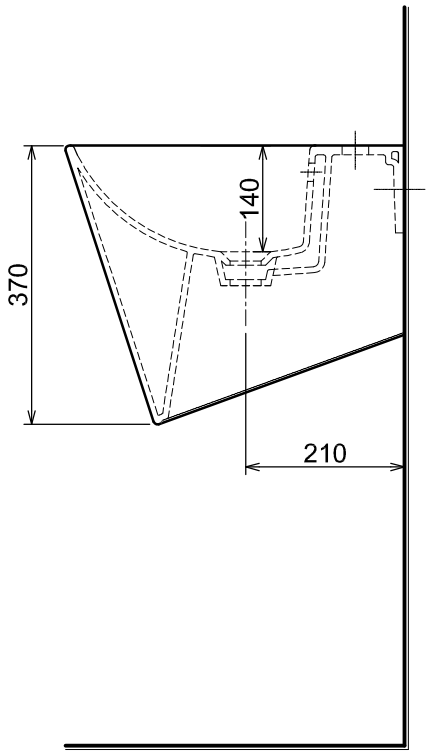

FINISHED FLOOR

BACK ELEVATION

FINISHED FLOOR

SIDE ELEVATION

NO	ACCESSORIES	CODE
1	Overflow Ring	UYY 1064

REV	DESCRIPTION	DATE

UNLESS NOTED OTHERWISE ALL DIMENSION IN mm.
LINEAR TOLERANCE : ± 5
ANGULAR TOLERANCE : ± 1°

DRAFTING STANDARD	BS 308
DRAWN	HASLAM
CHECKED	GC CHUA
APPROVED	YT NA
ESTABLISH DATE	22 - Dec - 18

Clay Industries Sdn Bhd™

INFORMATION CONTAINED IN CISB TECHNICAL DOCUMENT IS CONFIDENTIAL & REMAIN THE PROPERTY OF CLAY INDUSTRIES SDN BHD - VITREOUS CHINA DIVISION.

DRAWING TITLE :
WB 680E - Wall Hung Basin

DRAWING No. : TPD - WB / 18 - 18
REV No : 0
SIZE : A4
SCALE : 1 : 10
SHEET : 1 Of 1